Supplied By:
TRENCHDRAIN SUPPLY
877-903-7246
www.trenchdrainsupply.com

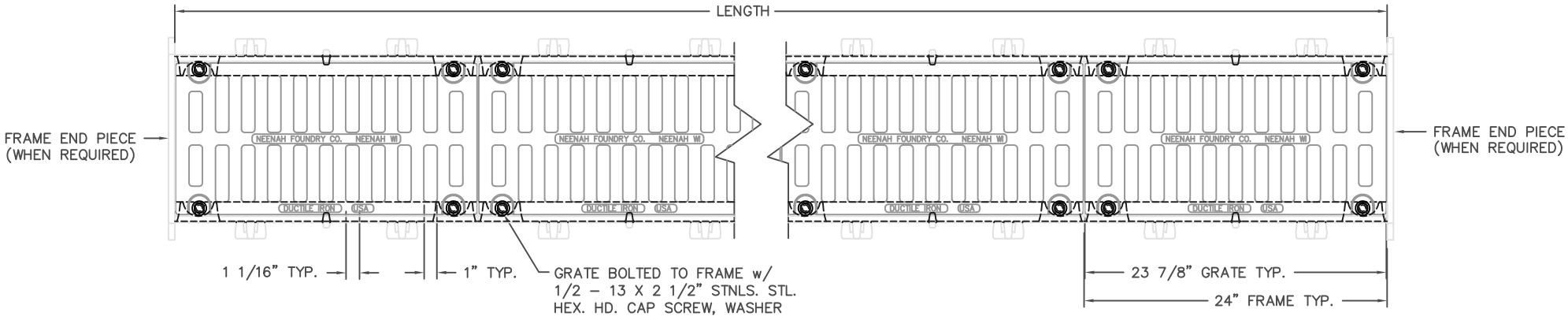

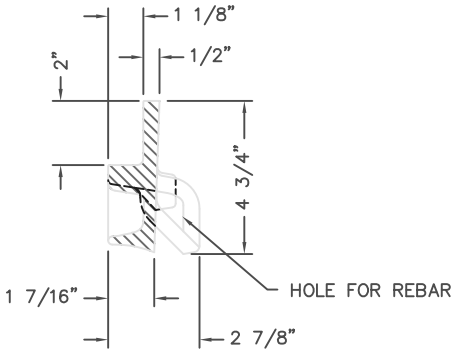

FRAME SECTION VIEW
SCALE 1:4

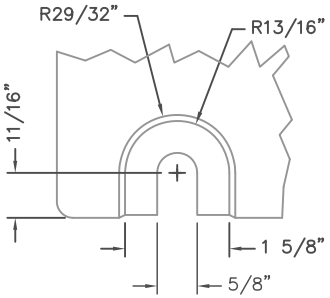

TYPICAL BOLT SLOT DETAIL
SCALE 1:2

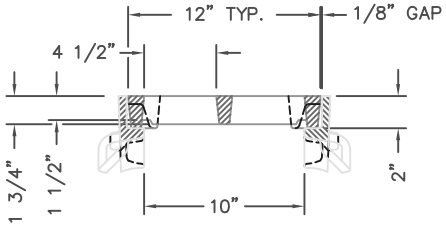

R–4990–CA BOLTED
TYPE "A" GRATE AND TYPE "B" FRAME
TYPICAL SECTION

COMP. NOS.: SIDE FRAME 4999–2400; END FRAME 4990–3112; GRATE 4999–2012
MATERIAL: FRAME – CAST GRAY IRON ASTM A–48, CLASS 35B
GRATE – CAST DUCTILE IRON ASTM A–536, 55 + KSI YIELD
FINISH: NO PAINT

DR. E. NIVER	SCALE 1/8"=1"	TITLE: R–4990–CA DOUBLE BOLT STYLE TYPE "A" GRATE w/ TYPE "B" FRAME	
CH.			
APP.	DIM CHK.	NEENAH FOUNDRY COMPANY NEENAH WISCONSIN 54956	NF- B
DATE 11–20–2009			

CAD DWG. REF: 4990CA AB.DWG–1